OPERATOR'S MANUAL

46" SICKLE BAR

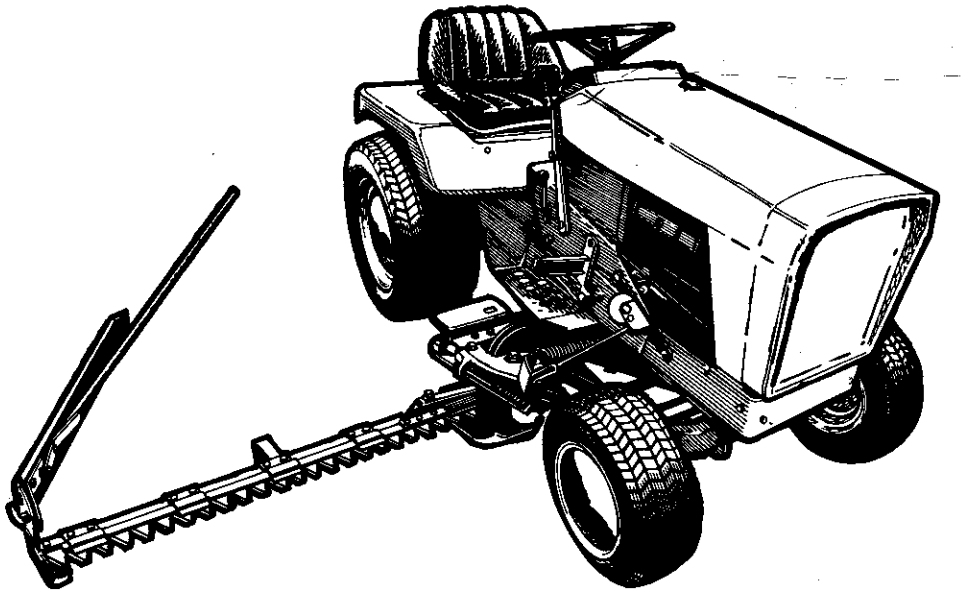

46" SICKLE BAR
MFG. NO. 1690030

CAUTION: Read Manual Thoroughly Before Operating

FORM - 1651418
PRINTED IN U.S.A.
7612

Dear Customer,

Congratulations on your purchase of this sickle bar mower. It has been carefully designed and built to give you years of dependable service. With proper care, it will help you do your mowing jobs efficiently.

To make sure you get the best use from your sickle bar mower, study this manual carefully. Make sure that the sickle bar is assembled and installed properly, and that all adjustments are done correctly. Be sure that you (and anyone who operates this machine) know how to use the machine safely. Read this manual and the tractor manual thoroughly and become familiar with the controls of the machine before operating.

For your own safety as well as others, study the safety rules in this manual and those in the tractor manual. Review this information often. It is there for your benefit and is important.

This manual tells how to assemble, install, service, operate and adjust your sickle bar mower. If any help is needed with any of these procedures, your dealer will be happy to help you.

Measurements are given in this manual with metric equivalents in parentheses. For example, behind the measurement 1/8 inch would appear: (3 mm). So, the metric equivalent of 1/8 inch is 3 millimetres.

These metric measurements are provided for your convenience as an aid in converting to the metric system. A list of metric terms and abbreviations used in this manual is provided below.

LIST OF ABBREVIATIONS OF METRIC TERMS

1. kg = kilogram
2. km/h = kilometres per hour
3. m = metre
4. mm = millimetre
5. N·m = newton-metres

46 Inch Sickle Bar

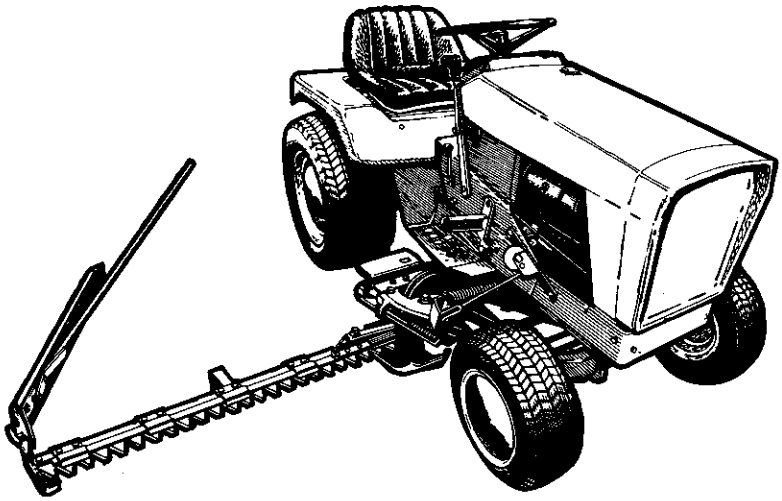

Table of Contents

SAFETY RULES 2
IDENTIFICATION 3
ACCESSORIES 3
INSTALLATION 4
OPERATION 6
NORMAL CARE 10
TROUBLESHOOTING 16
ADJUSTMENTS 17
ASSEMBLY 18
SPECIFICATIONS 21

WARNING

Read these safety rules and follow them closely. Failure to obey these rules could result in loss of control of vehicle, severe personal injury to yourself or bystanders, or damage to property or equipment affecting safety.

Safety Rules

This notation preceding Cautions and Warnings in the text signifies important precautionary steps which, if not properly followed, could result in personal injury or damage to your equipment affecting safety.

General

- Read the Operating and Service Instructions carefully. Be thoroughly familiar with the controls and the proper use of the equipment.
- Never allow children to operate the machine. Do not allow adults to operate it without proper instruction.
- Do not carry passengers.
- Use only attachments or accessories designed for your machine. See your dealer for a complete list of approved attachments or accessories.
- Make sure:
  a. tractor and attachments are in good operating condition,
  b. all safety devices and shields are in place and in good working condition, and
  c. all adjustments (cutting height, etc.) have been made.

Preparation

- Handle gasoline with care — it is highly flammable.
  a. Use approved gasoline container.
  b. Never remove the cap of the fuel tank or add gasoline to a running or hot engine, or fill the fuel tank indoors. Wipe up spilled gasoline.
- Do not run the engine indoors. Exhaust fumes are deadly.
- Disengage all attachments and clutches and shift into neutral before attempting to start engine.
- Wear heavy footwear. Do not operate tractor when barefoot or when wearing open sandals or canvas shoes.

Operation

- Mark clearly or remove from the area to be mowed any objects which might be caught in, or be struck by, the sickle bar.
- Operate the sickle bar only in daylight or in good artificial light.
- Be especially careful when working around the cutter bar. The cutting edges are very sharp, and can cause injury.
- Be especially careful not to touch tractor or attachment parts which might be hot from operation. Allow such parts to cool before attempting to maintain, adjust or service.
- Use caution when operating on a sloping surface.
- To prevent the operator from being struck by the divider board, always lock it in the forward position before raising the sickle bar above 45 degrees for transport.
- Stay clear of all mower drive belts and pulleys when the tractor engine is running.
- Be sure the sickle bar has stopped before attempting to adjust, repair or service the mower.

Identification

When ordering replacement parts for your sickle bar mower be prepared to give your dealer the identification number found on the identification plate shown below. We suggest that you locate the number and record it below for easy reference.

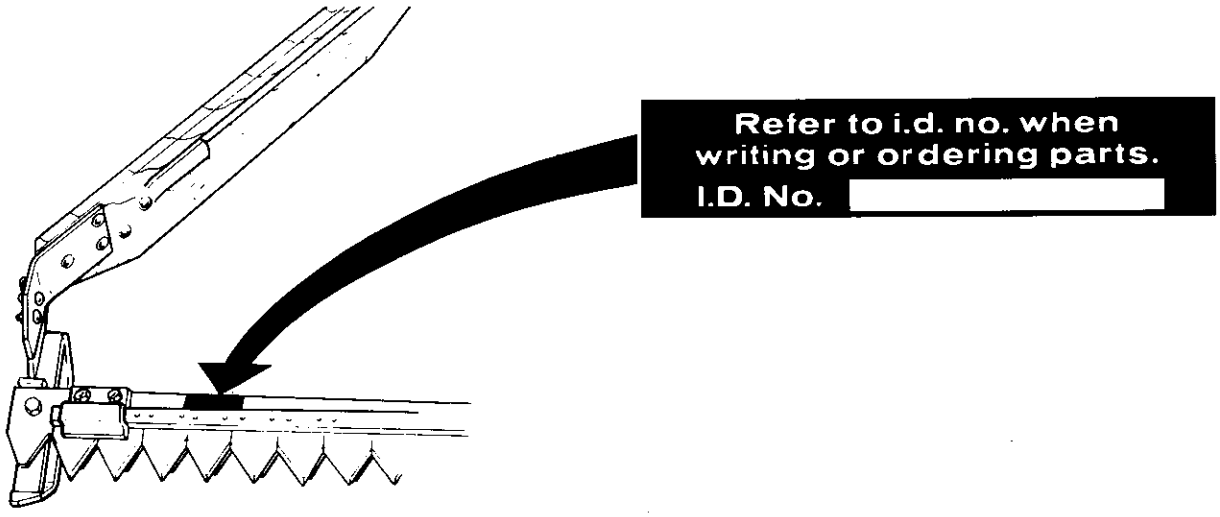

Accessories and Attachments

There are several optional accessories or attachments for your sickle bar mower. They will make your mowing jobs easier. See your dealer if you wish to purchase any of the following:

REAR WHEEL WEIGHTS — improves traction and stability, especially when used on left side only.

FRONT WHEEL WEIGHTS — improves stability, especially when used on left side only.

ELECTRIC LIFT KIT — raises and lowers sickle bar mower and other attachments with the flip of a switch.

HOURMETER — records engine operating time in tenths of an hour.

REAR LIGHT KIT — lights path when traveling in reverse at night.

Installation

CONTENT OF SECTION

This section describes how to install and remove the sickle bar mower. Before the sickle bar mower can be installed it must be assembled, and some parts must be assembled onto your tractor. Refer to Assembly Section in this manual for details.

INSTALLATION

Once these assembly tasks are completed, install the sickle bar mower on the tractor as follows:

1. Slide the sickle bar mower under the tractor from the right side. Use two pins (item A, figure 1) and spring clips (item B) to attach the mower to the front tractor axle.

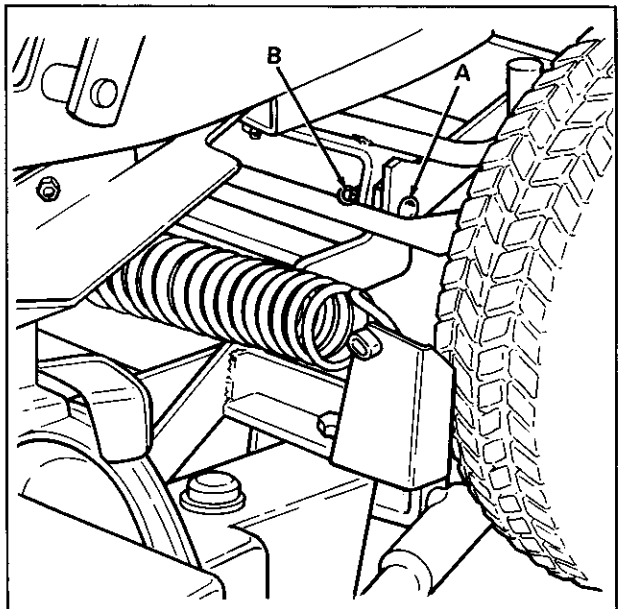

A. Pins
B. Spring Clips

Figure 1. Install Sickle Bar Mower to Tractor

2. Use pin and spring clip (item A, figure 2) to attach limited drop chain (item B) to tractor.

3. Attach cable (item E) to tractor lift arm (item F) with pin and spring clip (item G).

4. Remove pulley (item C) by removing spring clip and pin (item D). Reinstall these items after positioning cable around pulley.

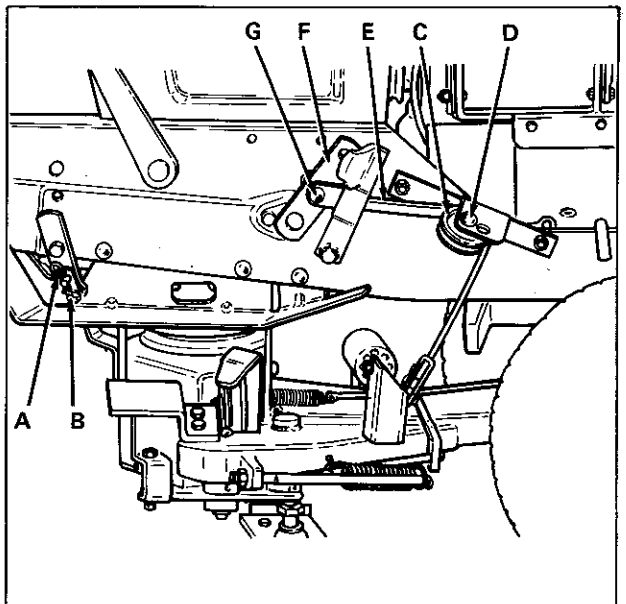

A. Pin and Spring Clip
B. Limited Drop Chain
C. Pulley
D. Pin and Spring Clip
E. Cable
F. Lift Arm
G. Pin and Spring Clip

Figure 2. Install Lift Cable to Right Side of Tractor

5. Pull down lever (item A, figure 3) to release spring tension on PTO pulley bracket.

6. Install mower drive belt (item B) over inside groove of PTO pulley (item C) around idler pulleys (item D) and the sickle mower drive pulley (item E). As you install this belt, be sure to include proper twists in the belt.

7. Pull up on belt tension lever. Lever will lock into position to put proper tension on the mower belt drive.

8. Start tractor, raise and lower mower, and check sickle bar for proper operation.

REMOVING THE SICKLE BAR MOWER

⚠ WARNING

Before attempting to adjust, service, or remove the mower, be sure the engine is shut off, the parking brake set, and the sickle knife has stopped moving.

To remove the sickle bar mower, follow these procedures:

1. Unhook transport chain and lower the cutter bar. Store chain inside tractor frame with hook attached to right side of tractor frame.

2. Lower mower to ground using tractor lift.

3. Push down on spring tension lever (item A, figure 3) to release tension on mower drive belt.
4. Remove mower drive belt (item B, figure 3).
5. Remove spring clip and pin (item D, figure 2) to remove pulley (item C). Remove lift cable (item E) by removing spring clip and pin (item G). Reinstall pulley with pin and spring clip.
6. Remove mower limited drop chain (item B, figure 2) by removing spring clip and pin (item A).
7. Remove two spring clips and pins (items A and B, figure 1) from tractor hitch. Store spring pins and pins on mower hitch.
8. Slide sickle bar mower out from under right side of tractor.

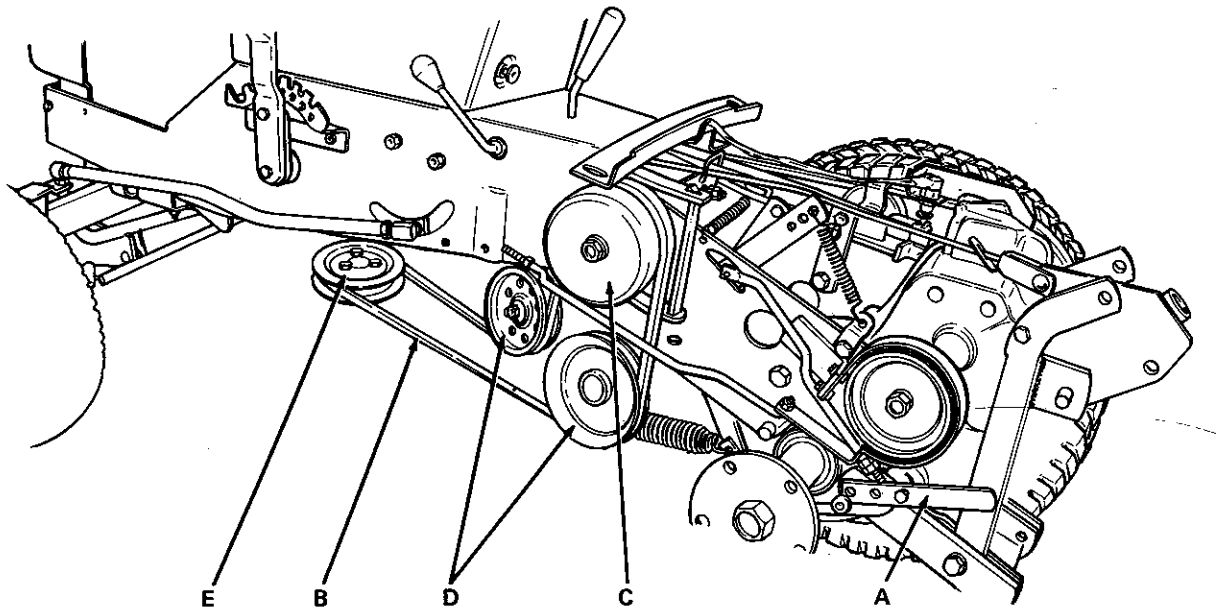

A. Belt Tension Lever
B. Drive Belt
C. PTO Pulley
D. Idler Pulleys
E. Drive Pulley

Figure 3. Install Drive Belt

Operation

CONTENT OF SECTION

A brief description of the sickle bar mower controls, followed by the basic operating procedures, is given in this section to help you get to know your sickle bar mower and how to operate it safely and efficiently.

CONTROLS

The sickle bar mower is operated using controls on the tractor. Figure 4 shows the locations, names and functions of these controls.

OPERATING PROCEDURES

The tractor supplies both power and motion for the sickle bar mower. Therefore, tractor operation is vital to proper operation of the sickle bar. Details for sickle bar mower operation are given in the paragraphs that follow. Read all these paragraphs. Then read the general operating procedure for tractor operation with attachments, given in the tractor manual, before mowing.

⚠ WARNING

Before attempting to inspect, adjust or service the sickle bar mower, make sure the tractor engine is stopped and the ignition key is removed. Be sure all moving parts have stopped.

CHECKS BEFORE STARTING

The checks listed below should be performed before each use of the sickle bar mower.

1. Read this manual. Read the tractor operator's manual. Be sure you know safety precautions and the locations and uses of the operating controls.
2. Check the sickle bar mower to be sure that it is properly installed on the tractor. Be sure all nuts, bolts and spring clips are secure.
3. Lubricate the mower as required. See Normal Care section of this manual.
4. Clearly mark or remove from the area to be mowed, any objects which could be caught in or struck by the sickle bar.
5. Determine the best mowing pattern for the job at hand.

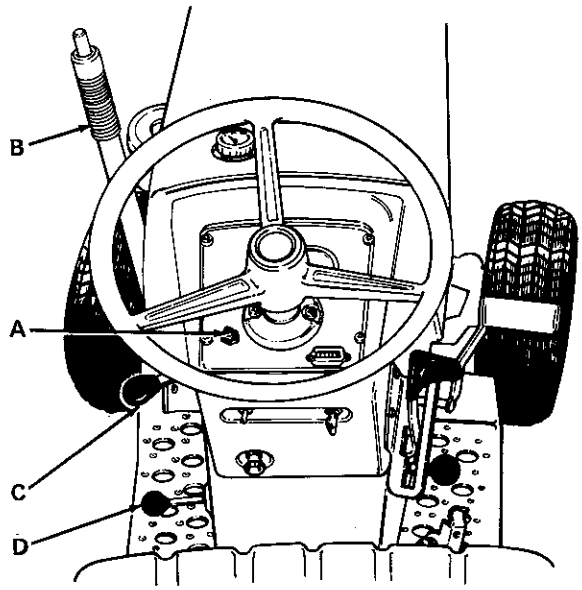

Item	Name	Function
A	**Power Lift Switch (Optional)**	Controls optional electrically-operated power lift for sickle bar mower.
B	**Lift Lever (Standard)**	Used to raise and lower sickle bar mower if item A is not present.
C	**Engine Speed Control**	Operates engine throttle to adjust engine speed.
D	**PTO (Power Take Off) Clutch Lever**	Operates clutch for sickle bar mower. Turns sickle ON and OFF.

Figure 4. Locations and Functions of Controls

SICKLE BAR OPERATION

Details for sickle bar operation are given in paragraphs that follow. Study all of these paragraphs.

LOWER THE SICKLE BAR

To lower the sickle bar for mowing, follow these steps:

1. The sickle bar (item A, figure 5) is stored in the transport position with divider board positioned forward. To lower sickle bar, shut engine off, remove ignition key and set the parking brake.

⚠ WARNING

Use care when handling the sickle bar to prevent injury from the sharp knives.

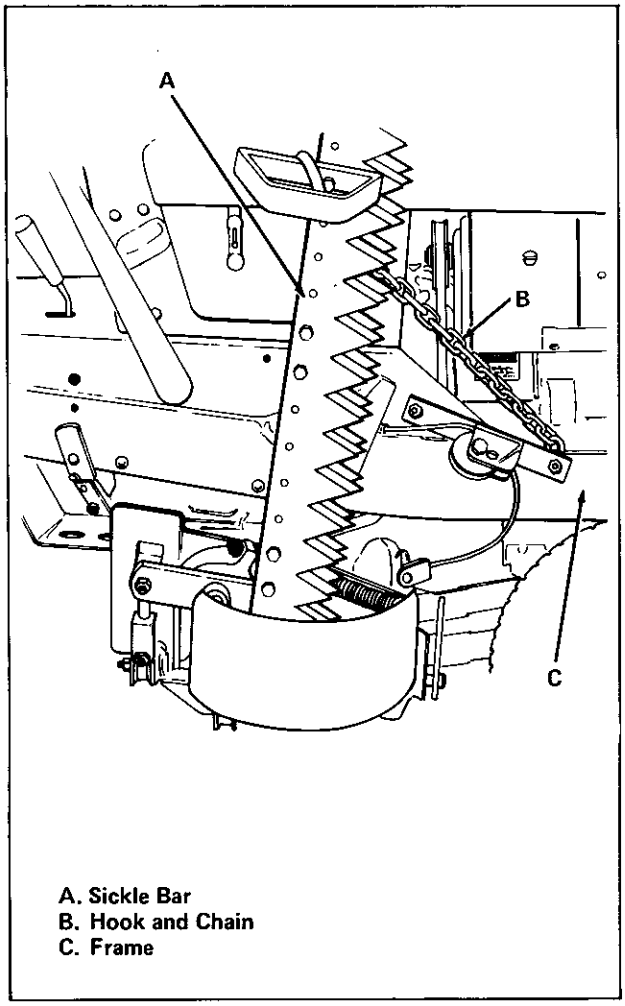

A. Sickle Bar
B. Hook and Chain
C. Frame

Figure 5. Sickle Bar in Transport Position

2. Unhook transport chain (item B) from the sickle bar and carefully lower it. The sickle bar will support itself at about a 45 degree angle.
3. Store transport chain inside tractor frame (item C).
4. Attach hook to frame. Lower sickle bar to the ground using manual or optional electric lift.

POSITION DIVIDER BOARD

To position divider board from transport to operating position remove spring clip and pin (item A, figure 6). Swing divider board (item B) into operating position. Store pin and spring clip with chain. Divider board must be free to float.

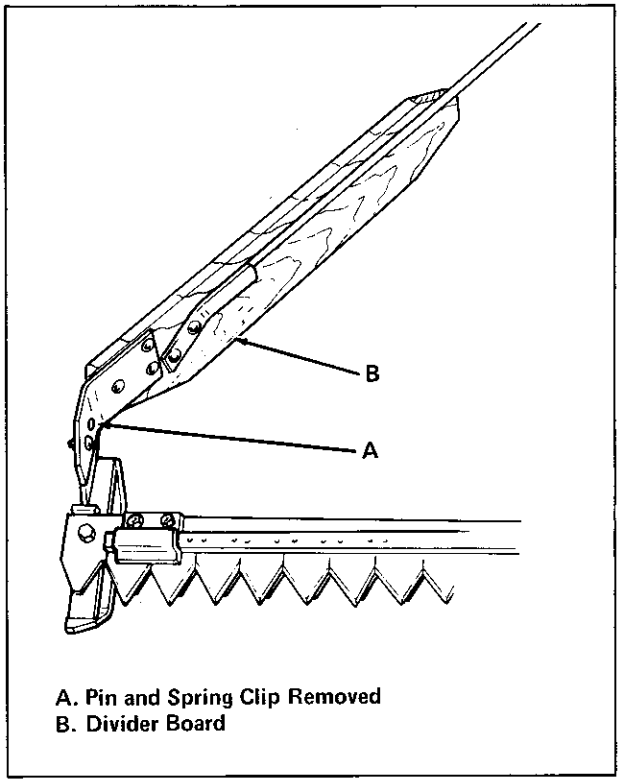

A. Pin and Spring Clip Removed
B. Divider Board

Figure 6. Divider Board in Operating Position

TRANSPORTING THE SICKLE BAR

For long distance transport, the sickle bar is stored in the vertical position (item A, figure 5).

⚠ WARNING

Reduce speed over any areas which are rough, sloping or where there are obstacles on which the sickle bar might catch.

The sickle bar may be transported short distances, such as across a field, or to clear an object by lifting the sickle bar with tractor lift (figure 7). It is not necessary to disengage mower drive when sickle bar is lifted.

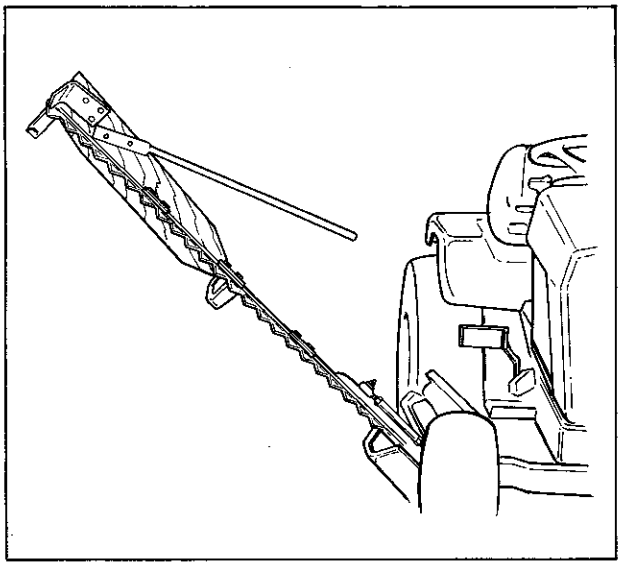

Figure 7. Sickle Bar Raised with Tractor Lift

OPERATION ON SLOPES

For your personal safety, be especially careful when operating the tractor and sickle bar mower on slopes. Always mow up and down the face of slopes, and never across the face. For added stability use two rear wheel weights when mowing slopes from 20 to 35 percent (11.3 to 19.3 degrees). Never mow on slopes greater than 35 percent. Also, use slow tractor ground speeds for better handling and control when mowing slopes. If the tractor is on level ground however, the sickle bar can be used to mow across slopes, such as ditches and embankments, by utilizing the vertical cutting range of the sickle bar.

NOTE

The sickle bar is hinged for cutting above and below ground level. With the tractor on level ground, the bar can be lowered below ground level for cutting jobs such as ditches, or raised above ground level using the tractor lift for cutting along embankments.

ENGAGING THE MOWER DRIVE

The mower drive should be engaged only when the sickle bar is lowered to an angle of 45 degrees or closer to the ground. After the engine has been started, the mower may be engaged by placing PTO lever in the ON position.

⚠ WARNING

Be particularly careful and operate at low tractor speed on slopes or in any area where the cutter bar may strike solid objects which might cause the tractor to be jarred. Tractor speed can easily be varied for making turns, traveling around ends, and varying mowing conditions by using the throttle control lever.

CUTTER BAR BREAK BACK

The cutter bar is mounted to the mower frame so that it can pivot or "break back" alongside the tractor wheel if a solid object is struck. This feature helps protect the mower as well as the operator and tractor. If the mower breaks back, immediately stop the tractor forward motion and shut off the drive to mower by moving PTO lever to off. Back the tractor slowly; the cutter bar should snap back into operating position. If it does not relatch or if it is damaged, stop the engine, set the parking brake and examine the mechanism.

⚠ CAUTION

Never attempt to inspect mower while tractor engine is running.

Adjustment of the break back mechanism is explained in the Adjustment section in this manual.

ENGINE SPEED SETTING

When mowing, the engine should normally be operated at 3/4 to full throttle. If the material to be mowed is light, 3/4 engine speed may be enough. Full throttle may be required for heavier material. See operating chart in the tractor operator's manual.

TRANSMISSION GEAR SELECTION AND TRACTOR SPEED

For mowing, select the proper transmission gear and use engine speed control to regulate tractor speed. In smooth fields under light mowing conditions a tractor speed of 5 MPH (8.0 km/h may be desirable. Under heavy mowing conditions or on rough terrain, a tractor speed of 3 MPH (4.8 km/h)

should be used. See operation chart of the tractor operator's manual for suggested control and speed settings.

MOWING PATTERNS

The size and type of area to be mowed determines the best mowing pattern. Obstructions such as trees, fences and buildings must be considered.

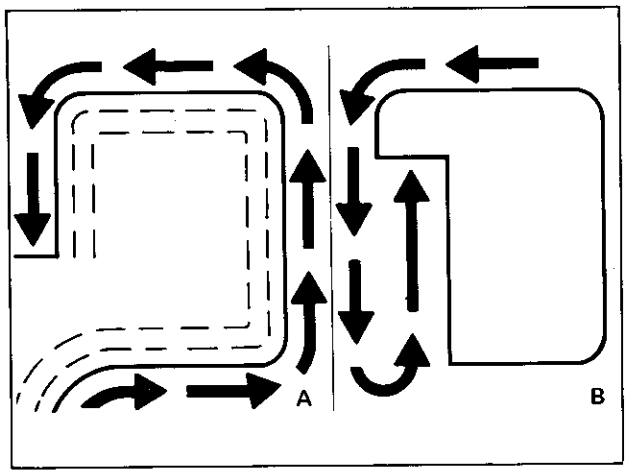

Figure 8. Mowing Patterns

Generally, when using a sickle bar mower it is desirable to mow one swath in a counterclockwise direction (item A, figure 8) on the first pass next to fences, etc. After this first pass, the remainder of the mowing should be done in a clockwise direction (item B) so that the tractor wheels do not run over the uncut area. In a nearly square field, it usually is the most efficient to mow on all four sides. In a long and narrow field, it may be easier and quicker to mow along the two long sides and drive along the short ends with the sickle bar slightly raised.

Turning corners using a sickle bar mower can be done either of two ways. A sharp right turn may be made at each corner so that the sickle bar swings back and immediately begins cutting the next side of the field (item A, figure 9). Making corners in this manner requires some practice. When approaching a corner, use the engine speed control lever to slow the tractor speed. Turn the tractor steering wheel quickly to the right to bring the tractor around the corner sharply. After completing the turn, return the engine speed control lever to the original position. When this method is used the sickle bar remains in contact with the ground at all times.

Another way to turn the mower is to raise the sickle bar, using the tractor lift system at the end of each mowing strip and make a sharp left turn (item B). As soon as the sickle bar completes cutting a strip, raise it slightly to bring it above the cut material so it does not plug the sickle, and make a tight left turn of 270 degrees and bring the tractor alongside the unmowed area. Making corners in this manner will normally be neater and is a little easier to do than making sharp right hand turns.

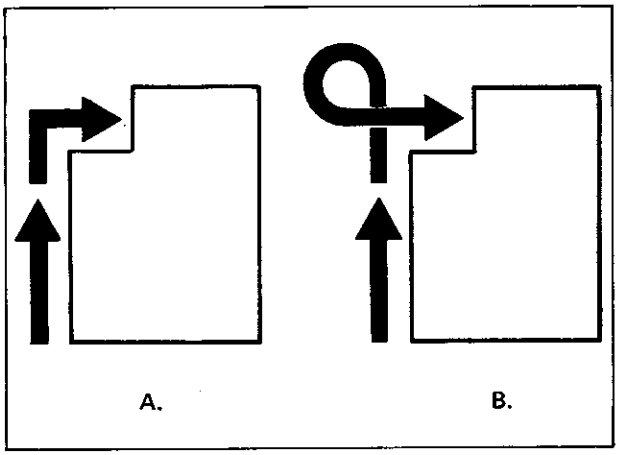

Figure 9. Turning Corners

Normal Care

CONTENT OF SECTION

Your sickle bar mower was designed and built to provide years of service with only minor care. Certain tasks, however, must be performed to keep the sickle bar mower in good operating condition and to avoid costly repairs. This section describes and provides procedures for necessary care of your sickle bar mower.

SCHEDULED CARE

A schedule for routine care is provided in figure 10. Your dealer has performed the tasks required before the first use of the sickle bar mower. We suggest that you at least check these items to insure that the sickle bar mower is ready for use. Performing the checks will also help you to become familiar with care of this sickle bar mower.

All other scheduled care is performed after operating the sickle bar mower for a specific amount of time. See figures 11 to 13. Remember to perform the "every 1 hour check" when you perform the "every 5 hour check."

Because the schedule is based on operating time, it will be necessary to estimate and keep a record of all operating time. A Maintenance Record (figure 15) is provided to help you keep a record of all operating time and maintenance repair actions.

Care Required	See Figure	Schedule		
		Before First Use	Every 1 Hour	Every 5 Hours
Lubricate Sickle Knife and Ball Joints	11	•	•	
Grease Bearings	12	•		•
Lubricate Grease Fittings	13	•		•

Figure 10. Summary of Scheduled Care

AFTER EACH USE

Clean off entire sickle bar assembly. Inspect mower and tractor thoroughly, looking for belt wear, missing bolts, spring clips, pins and damaged parts.

NORMAL STORAGE

To protect your sickle bar mower, store it in a dry, enclosed area.

If you don't intend to use your sickle bar mower for 30 days or more, use the off-season storage instructions which follow.

OFF-SEASON STORAGE

1. Remove the sickle bar mower from the tractor.
2. Use water under hose pressure and a brush to thoroughly clean the sickle bar mower of any build-up of dirt or other material.
3. Cover any area where paint has been worn or chipped away with paint or a light coat of oil.
4. Lubricate the sickle bar mower. See figure 10.
5. Store mower in a dry place.

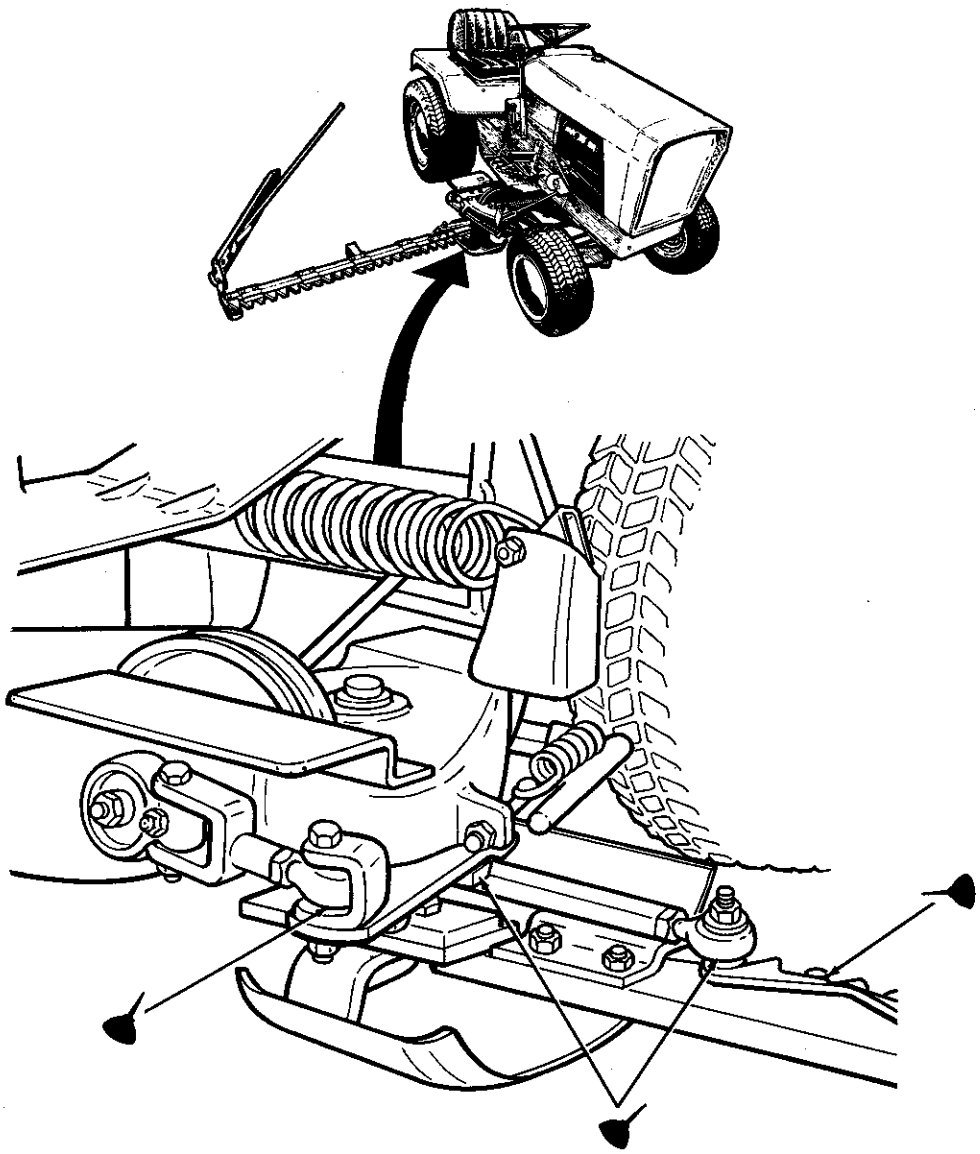

NOTE

Keep grease and oil off belts and pulleys.

Symbol	Use	Apply With	Procedure
	Medium weight (SAE 30) oil	Oil can	1. Brush and wipe dirt and grass from area. 2. Apply a few drops of oil. 3. Wipe up any excess oil.

Figure 11. Lubricate Sickle Bar and Ball Joints (1-Hour Care)

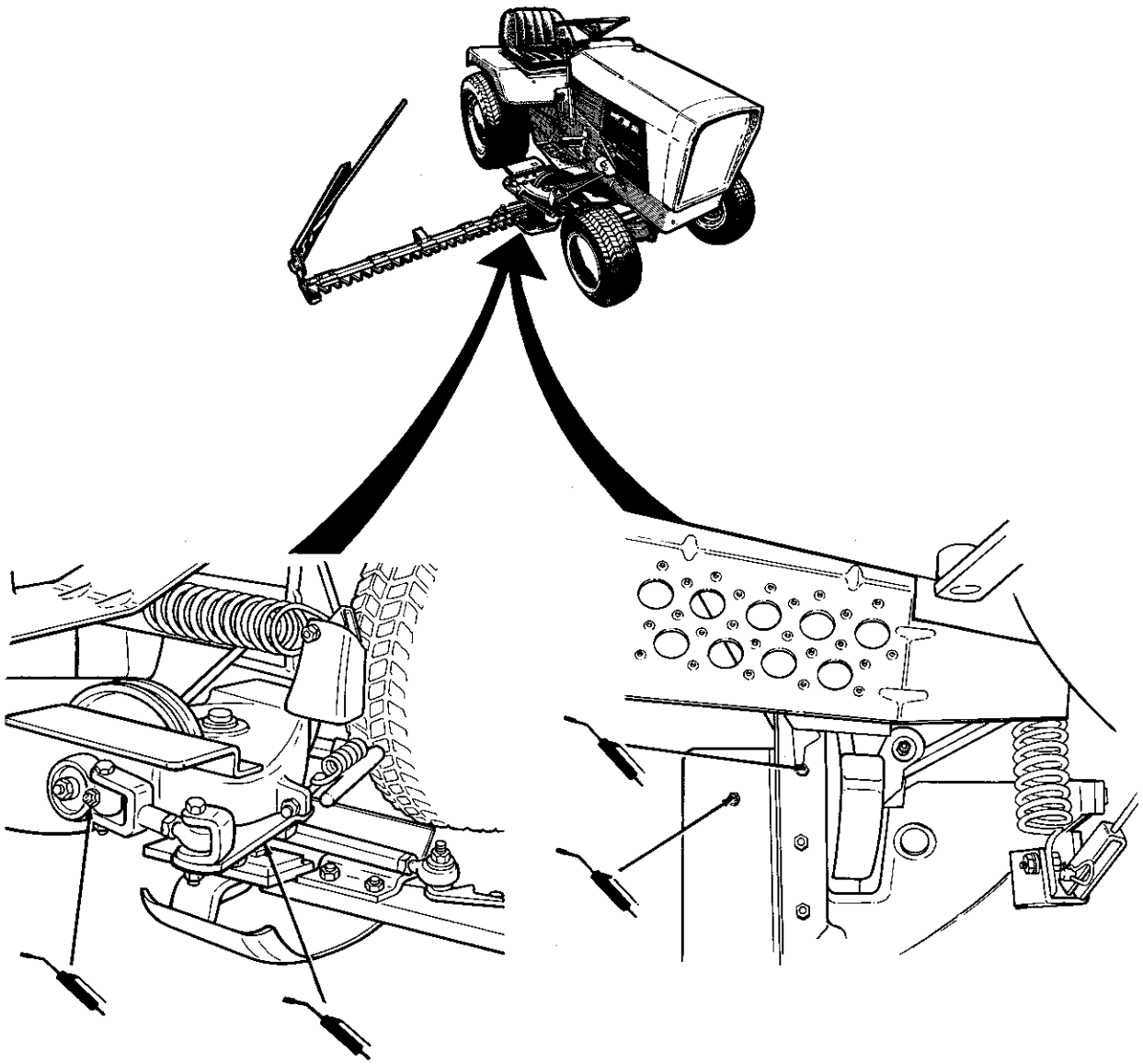

NOTE

Keep grease and oil off belts and pulleys.

Symbol	Use	Apply With	Procedure
	Lithium base automotive grease	Grease gun	1. Wipe fitting clean with rag. 2. Apply 5 shots of grease.* 3. Wipe up any excess grease.

*or less, if grease is forced out. DO NOT OVER LUBRICATE.

Figure 12. Grease Bearings (5-Hour Care)

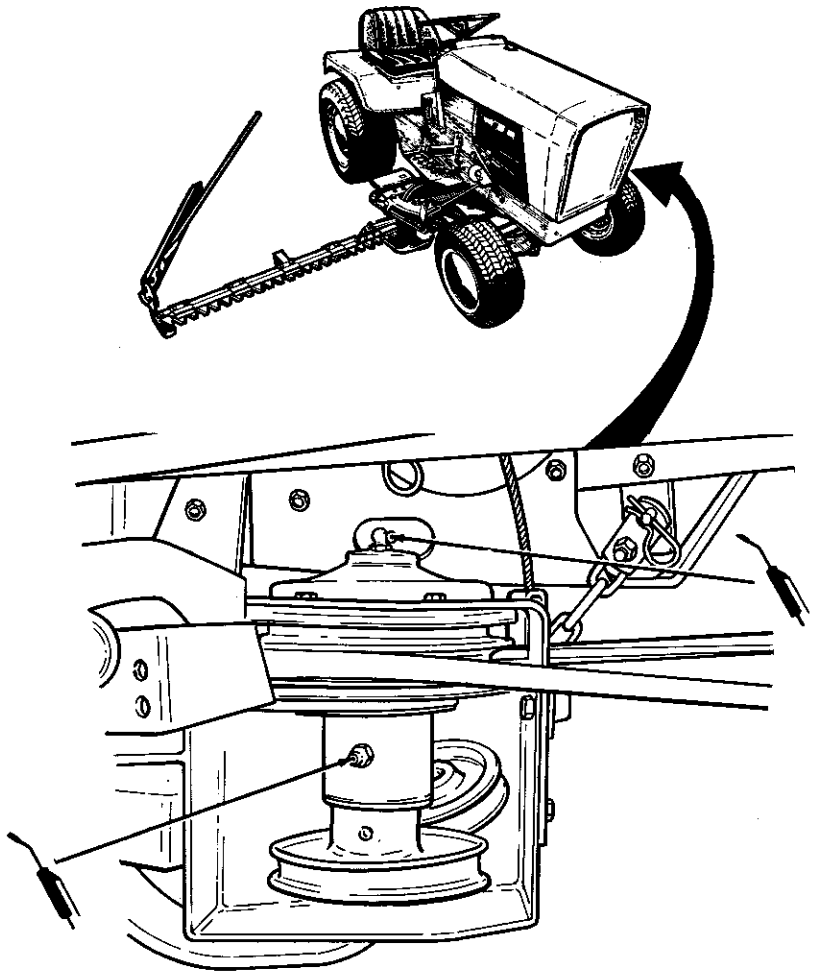

NOTE

Keep grease and oil off belts and pulleys.

Symbol	Use	Apply With	Procedure
	Lithium base automotive grease	Grease gun	1. Wipe fitting clean with rag. 2. Apply 5 shots of grease.* 3. Wipe up any excess grease.

*or less, if grease is forced out. DO NOT OVER LUBRICATE.

Figure 13. Lubricate Grease Fittings (5-Hour Care)

REMOVING THE SICKLE KNIFE/BLADE

If it should be necessary to remove the sickle knife for replacement or repair proceed as follows:

1. Remove three capscrews (item A, figure 14) and lockwashers from the sickle knife.
2. Carefully slide sickle knife out of the right end of the sickle bar.
3. Reinstall a new or repaired knife in the cutter bar and replace three lockwashers and capscrews. Securely tighten capscrews. Torque to 19-22 foot pounds (26-30 N·m).

⚠ WARNING

To avoid personal injury, be especially careful when handling the sickle knife. The blades are very sharp. Also, keep hands away from the cutting edge when raising (or lowering) the bar to the transport position, as the knife will move during this procedure.

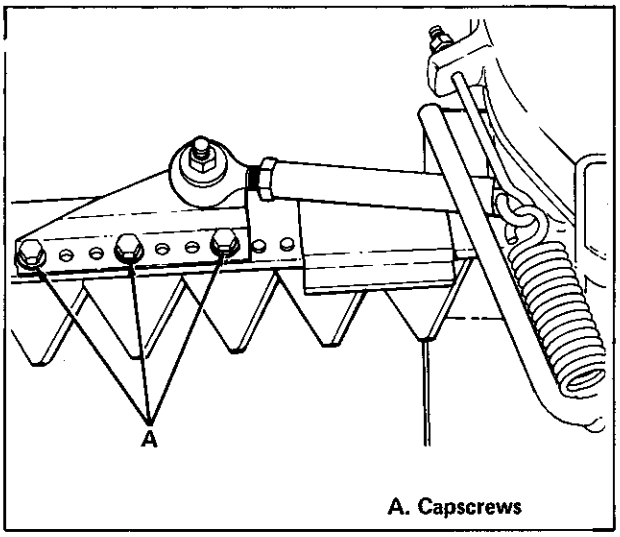

Figure 14. Sickle Knife Replacement

Maintenance Record

Date	Hours Used	Lubrication	Maintenance/Repair

Figure 15. Maintenance Record

Troubleshooting

CONTENT OF SECTION

This section of the manual describes how to troubleshoot some of the more common and easily corrected sickle bar mower problems. For problems not covered in this manual, it is recommended that you contact your dealer.

⚠ WARNING

For your safety, before trying to adjust, service, or repair the sickle bar mower, disengage PTO clutch, stop engine, remove key, set parking brake and be sure the sickle knife has stopped moving.

TROUBLESHOOTING PROCEDURES

Troubleshooting procedures are provided in figure 16. To use these procedures, first locate the problem description that best describes the trouble that you have encountered. Check the possible causes one at a time in the order that they are listed. Correct any problems that are found and try to operate the sickle bar mower again to see if you have eliminated the trouble.

Problem	Cause/Remedy
1. Mower cuts unevenly.	A. Cutter bar not lowered completely. Be sure lift is lowered all the way.
2. Rough looking cut – or grass being pulled out by roots.	A. Engine speed too slow. Increase engine speed. B. Tractor speed too fast. Reduce tractor speed. C. Knife edges dull. Sharpen or replace sickle knives. D. Knives not registered correctly. See Adjustments.
3. Cutter bar does not raise high enough (45°) using tractor lift.	A. Lift cable not in correct lift bracket hole. Place pulley in forward hole.
4. Cutter bar breaks back too easily.	A. Tractor speed too fast. Reduce tractor speed. B. Break-back latch not correctly adjusted. Adjust break-back latch. See Adjustment section.
5. Cutter bar does not break back when solid object is hit.	A. Break-back latch not lubricated. Lubricate latch. B. Break-back latch not properly adjusted. Adjust break-back latch. See Adjustment section.
6. Sickle knife noisy or vibrates excessively.	A. Sickle knife wear plates badly worn. Replace wear plates. B. Sickle knife clips badly worn. Replace clips.
7. Tractor handles poorly.	A. Tires not properly inflated. Inflate tires according to tractor owner's manual. B. Traveling too fast on rough or sloping ground. Reduce speed. C. Not using recommended weights. Use rear wheel weights.
8. Drive belt falls off.	A. Limited drop chain not hooked up to tractor frame.
9. Planetary drive runs hot.	A. Lubricate more frequently.

Figure 16. Troubleshooting Procedures

Adjustments

CONTENT OF SECTION

It is important that the sickle bar mower be properly adjusted. This section describes how to make the needed adjustments.

⚠ WARNING

Before attempting to adjust the sickle bar mower, lower sickle bar to the ground, stop engine, remove key, set parking brake, and be sure sickle has stopped moving.

SICKLE KNIFE REGISTER ADJUSTMENT

To operate efficiently the knife section (item A, figure 17) must center on the ledger plate (item B) when the sickle drive mechanism is turned so that the sickle knife is as far right as it will go. Check alignment. If adjustment is required, proceed as follows:

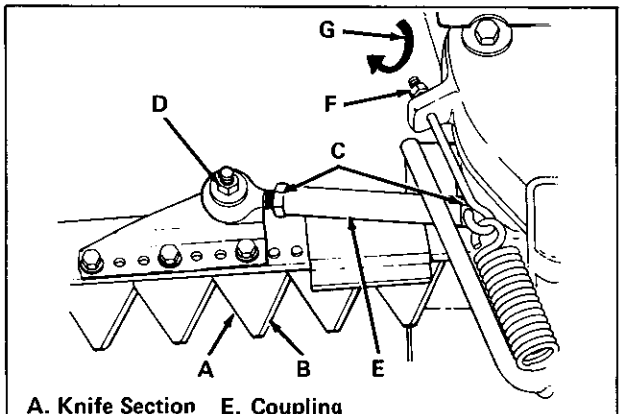

A. Knife Section
B. Ledger Plate
C. Nuts
D. Nut
E. Coupling
F. Nuts
G. Clockwise

Figure 17. Sickle Knife Register

⚠ WARNING

Use care when working around the cutter bar assembly, the knives are very sharp.

1. Rotate the sickle drive pulley by hand until the sickle knife is as far right as it will go.
2. Loosen two nuts (item C).
3. Remove nut (item D) and lift the outer end of the rod end assembly off the bolt stud.
4. Move the sickle knife until section (item A) is centered on the ledger plate (item B).
5. Rotate the outer end of the rod end as required to line it up with the sickle knife so it can be placed over the stud without moving either the drive mechanism or the sickle knife.
6. Install the rod end over the stud. Secure tight with nut (item D).
7. The amount of thread on the outside of the two nuts (item C) should be equal. Before tightening them, rotate coupling (item E) as necessary to center it. Tighten the two nuts (item C) securely against coupling (item E).

BREAK-BACK ADJUSTMENT

The amount of force required to break away the cutter bar can be adjusted by turning the nuts (item F, figure 17).

To increase the amount of force required to break away the cutter bar, turn the nuts (item F) clockwise (item G). To decrease the amount of force required, turn the nuts counterclockwise. Tighten the nuts securely against each other to hold the desired spring tension.

Assembly

Before your sickle bar mower can be installed on the tractor it must be assembled. This section describes how to assemble your sickle bar mower step-by-step.

ASSEMBLY OF SICKLE BAR MOWER

1. All items needed to assemble the sickle bar mower are provided with the mower. Sort out all items from hardware package and arrange items by type and size.
2. Remove belt guard (item A, figure 18) by removing nut (item B). Temporarily store nut and related washers on stud (item C).
3. Loosen three capscrews (item A, figure 19) on bracket and four capscrews (item D) on shroud. Push planetary assembly (item B) towards spring (item G, figure 18) to create slack for belt installation. The bracket may have to be removed to install the lift.
4. Install sickle drive belt (item D, figure 18) over pulley and idler pulley (item E). Then twist belt 1/4 turn clockwise as shown by arrow (item F). Do not hook up spring (item G) at this time.

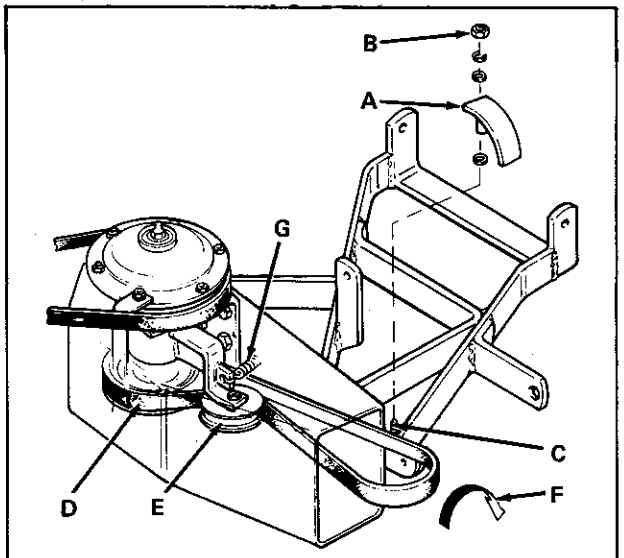

A. Belt Guard
B. Nut
C. Stud
D. Drive Belt
E. Idler Pulley
F. Belt Twist Arrow
G. Spring

Figure 18. Frame and Drive Pulley

5. Position drive group (item G, figure 19) as shown in figure 19 and install drive belt over drive pulley (item H).
6. Lubricate hinge shaft (item F) lightly and then install shaft through holes in frame and hinge. Secure hinge shaft by installing cotter pins (item E).
7. Hook up spring (item G, figure 18) to idler pulley. Push planetary assembly (item B, figure 19) away from drive group to tighten drive belt. Retighten capscrews (items A and D). Lift up on bar (item C) when tightening capscrews (item D).

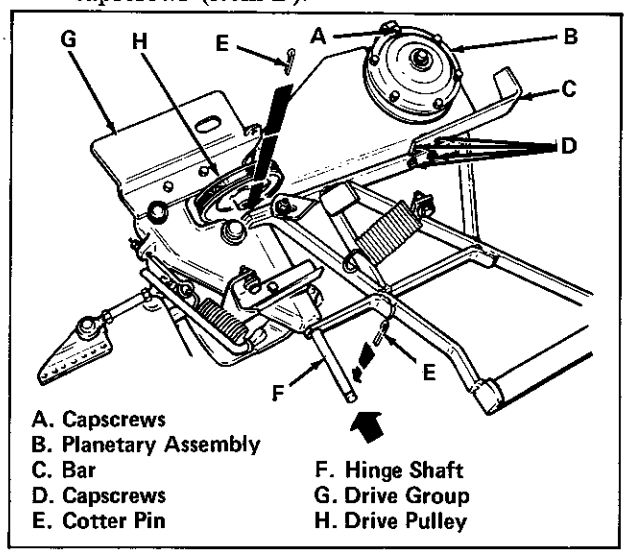

A. Capscrews
B. Planetary Assembly
C. Bar
D. Capscrews
E. Cotter Pin
F. Hinge Shaft
G. Drive Group
H. Drive Pulley

Figure 19. Attaching Drive Group

8. Mount sickle group to drive group using the longest capscrew (item B, figure 20) and the remaining long capscrew (item A). Insert plow bolt (item C).
9. Install four flat washers over each capscrew and one flat washer over the plow bolt before mating the sickle and drive group.
10. Secure capscrews and plow bolt by installing lockwashers and hex nuts.
11. Torque capscrews and plow bolt to these values:

    Item A — 30 foot-pounds (41 N·m)
    Item B — 50 foot-pounds (68 N·m)
    Item C — 20 foot-pounds (27 N·m)

12. Mount drive group sickle head (item F) to sickle head using the remainder of the three longest capscrews (item D), and three lockwashers (item E). Torque capscrews to 19 to 22 foot-pounds (26 to 30 N·m). Do not overtighten.
13. Reinstall belt guard (item F, figure 21) with its washers and lockwashers (see figure 18) and nut (item A, figure 21); positioning slotted belt guard so it does not touch belt or

pulley even when the cutter bar is raised to the transport position.

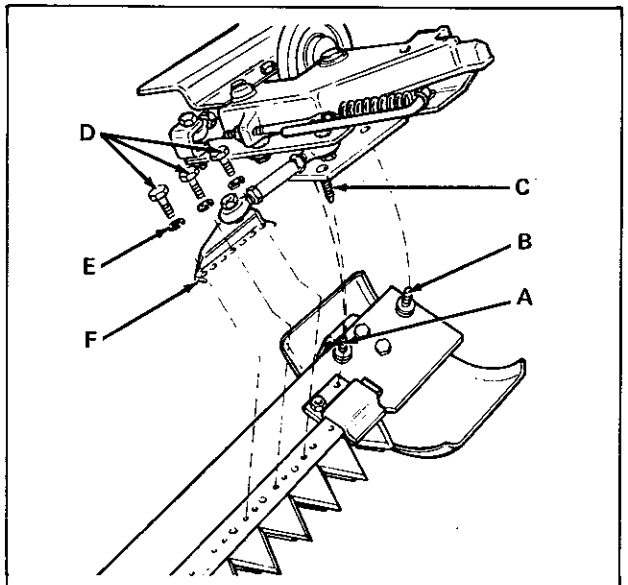

A. Capscrew
B. Capscrew
C. Plow Bolt
D. Capscrews
E. Lockwashers
F. Sickle Head

Figure 20. Attaching Sickle Group

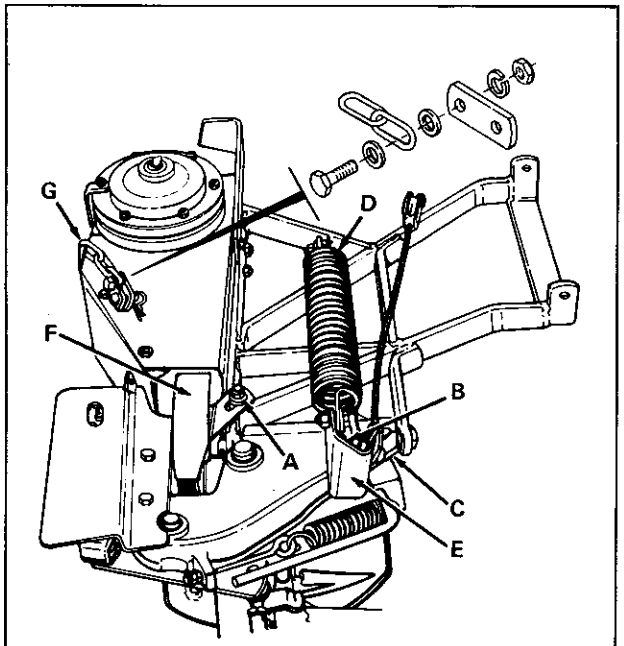

A. Nut
B. Spacer
C. Cable
D. Spring
E. Cable Mounting Assembly
F. Belt Guard
G. Chain

Figure 21. Spring and Belt Guard Installation

⚠ CAUTION

Use care when attaching spring as it can snap back and cause injury.

14. Lift frame so it is perpendicular to drive group. Hook large spring (item D) over spacer (item B) on cable mounting assembly (item E). Lower frame to original position.
15. Secure lift cable (item C) to cable mounting assembly using pin and spring clip.
16. Secure mower mounting chain (item G) using the attaching hardware shown in figure 21.
17. Mount divider board (item A, figure 22) to outer shoe of sickle bar using the smallest carriage bolt (item B) and locknut. Install pin and spring clip (item C).
18. Attach divider rod (item D) to divider board using last two carriage bolts (item E), flat washers, lockwashers, and hex nuts.

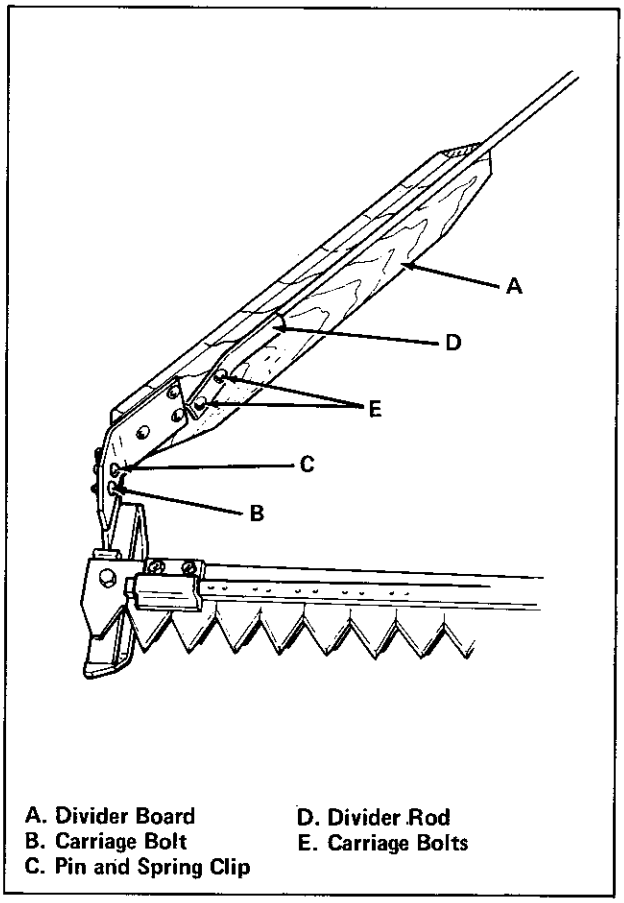

A. Divider Board
B. Carriage Bolt
C. Pin and Spring Clip
D. Divider Rod
E. Carriage Bolts

Figure 22. Attach Divider Board and Rod

ATTACHING PARTS TO TRACTOR

The remaining parts are installed on the tractor before installation of sickle bar mower. These parts can remain on the tractor even when the sickle bar mower is removed. Attach the following:

1. Install chain support (item A, figure 23) to tractor frame using the shortest of the remaining capscrews. Secure with lockwasher and hex nut.
2. Secure one end of pulley mounting assembly (item B) using shorter of two remaining capscrews (item C), a lockwasher, and a hex nut. Use the longer capscrew (item D) to install the other end of the pulley mounting assembly. The order of parts and hardware will be capscrew, flat washer, pulley mounting assembly, two flat washers as spacers, and then the tractor frame. On the inside of the frame place the chain (item F) on the capscrew, then a flat washer, lockwasher, and nut. If desired, the chain can be used as spacing material in place of the two flat washers between the pulley assembly and the tractor frame. The capscrew will then be secured by a lockwasher and nut, and three flat washers will not be used.
3. Store transport chain inside tractor frame with hook (item E).

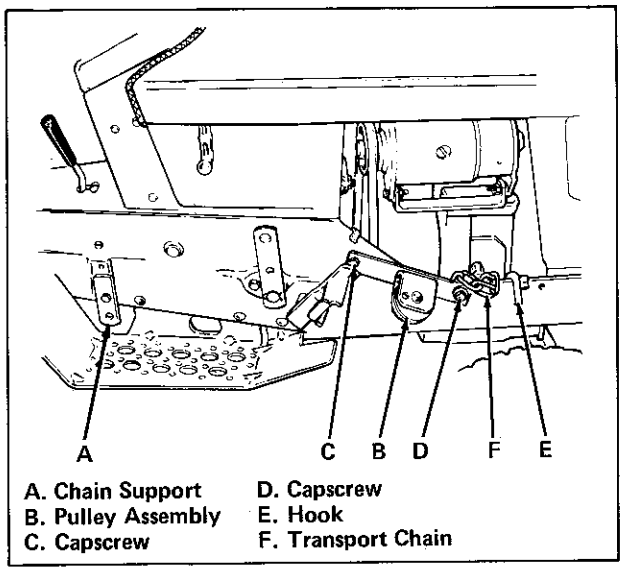

Figure 23. Attaching Parts to Tractor

Specifications

DIMENSIONS	**Width**	72 Inches (1.8 m) Fully assembled and laying flat.
	Length	25-1/4 Inches (641 mm)
	Height	15 Inches (381 mm) Fully assembled and laying flat.
	Weight	145 Pounds (66 kg)
	Cutting Width	46 Inches (1.2 m)
	Cutting Height	3 Inches (76 mm)
	Transport Clearance	3 Inches Maximum (76 mm)
CONTROLS	**Lift**	Tractor Lift System
	Engagement	Tractor Center PTO System
CONSTRUCTION	**Frame**	Welded steel with cast iron hinged sickle support
	Sickle Bar	Skid shoe supported with adjustable spring tension breakaway latch for sickle impact protection, hinged for cutting above and below ground level, spring tensioned counter balance.
	Sickle Sections	20-Heat treated steel, replaceable.
	Planetary Pulley	Stamped steel pulley and case, needle bearing pulley, pinions and output shaft.
	Hitch	Attaches to tractor front axle with two pins. Lift cable bracket attaches to frame with two bolts and lift cable to tractor lift system with one pin.
POWER DRIVES	**Tractor PTO**	Center PTO clutch
	Mower Drive	V-belt spring tensioned through tractor center PTO system, drives planetary pulley on mower.
	Secondary Drive	V-belt from planetary pulley output to eccentric shaft, adjustable spring tensioned idler.
	Pitman (eccentric) Drive	Needle bearing eccentric shaft and pitman bearing, needle bearing rocker arm, connecting links with rod end bearings.

SPECIFICATIONS SUBJECT TO CHANGE WITHOUT NOTICE.